MADE TO COMMISSION

OVUM

Hot & Cold thermal vessel, an egg form in black acrylic.

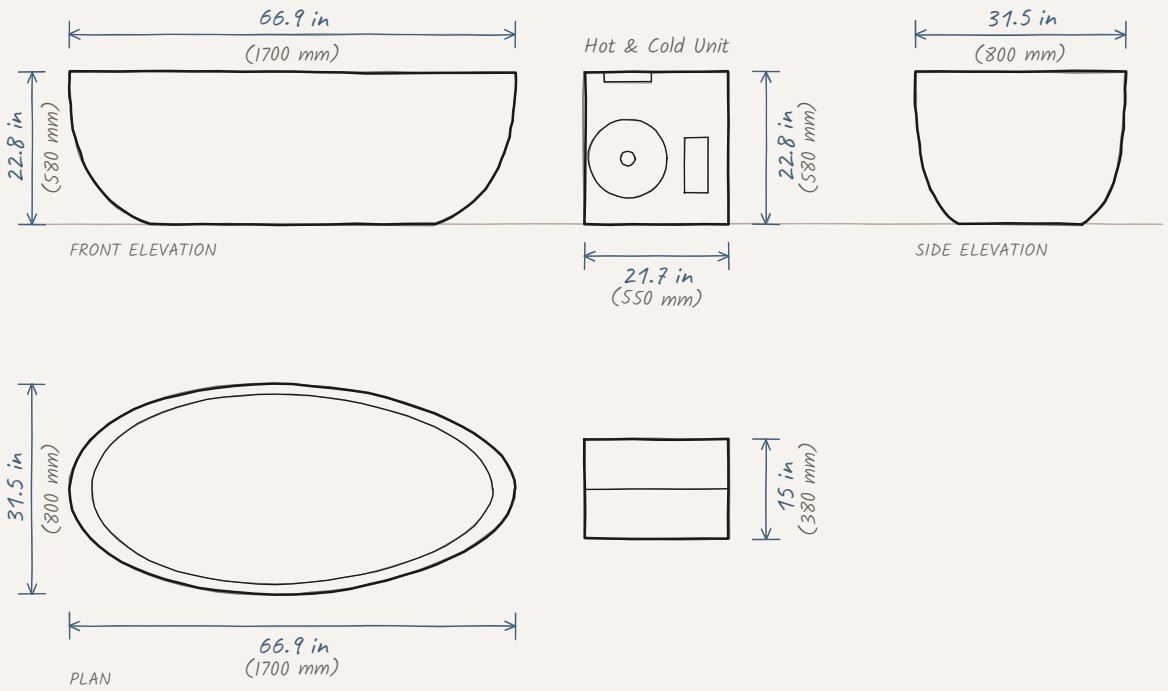

Walls curving inward to a narrower base, closing in a fine rounded rim. Black inside and out. The compact Hot & Cold Unit stands beside it.

Overall
66.9 L × 31.5 W × 22.8 H in (1700 × 800 × 580 mm)

Availability
Made to commission, delivered in about 3 months, in many cases sooner

Hot & Cold Unit
Separate compact unit, 15 W × 21.7 D × 22.8 H in (380 × 550 × 580 mm), drawn beside the vessel at the same scale

Water temperature
37 to 104°F

Delivery
Free, 48 contiguous United States. 5-Year Warranty on the shell, 1 year on the Hot & Cold Unit.

Front elevation, side elevation and plan at one scale. Dimensions in inches, millimeters in parentheses. Base widths and wall curves follow the product; only the figures shown are specified.

For reference only; not a contractual document. Figures from manufacturer documentation, October 2026. Drawing not for construction.

OVUM Specifications

VESSEL

Overall	66.9 L × 31.5 W × 22.8 H in (1700 × 800 × 580 mm)

MATERIALS & FINISH

Shell	Acrylic with insulating foam layer
Finish	Black acrylic, inside and out
Jets	2 jets, 3 water intakes
Light	LED
Cover	Included

ORDER

Lead time	Made to commission, delivered in about 3 months, in many cases sooner
Delivery	Free, 48 contiguous United States
Warranty	5-Year Warranty on the shell, 1 year on the Hot & Cold Unit

HOT & COLD UNIT

Type	Separate compact unit, heats and cools, on casters
Water temperature	37 to 104°F (3 to 40 °C)
Dimensions	15 W × 21.7 D × 22.8 H in (380 × 550 × 580 mm)
Thermal output	Cooling 3,210 W · heating 4,150 W · 1 HP
Water care	Filtration, ozone disinfection
Controls	Touch screen, Wi-Fi app

ELECTRICAL

Unit supply	110 to 125 V, 60 Hz, grounded outlet
Protection	Residual current device on the unit, tested monthly
Power draw	About 1,150 W, around 10 A at 120 V; a standard 15 A household circuit is enough

INSTALLATION

Prepare	Water supply to fill, an outlet for the plug, a drain point
Placement	Freestanding. Indoors or outdoors; a roof or some shade is recommended. Keep the cover on when the weather turns extreme; plug kept away from rain and water
Unit clearance	At least 20 in (50 cm) on every side; never in a closet or cabinet

For reference only; not a contractual document. Figures from manufacturer documentation, October 2026. Drawing not for construction.